Lab 1.4. IPv6

Objectives

In this lab, we will study basic aspects of IPv6 protocol, how to manage different address types and configuration mechanisms. Also, we will analyze the most important characteristics of ICMPv6.

> Enable **bi-directional shared clipboard** in the VMs (Devices menu).
>
> Use VirtualBox (View menu) to take **screenshots**.
>
> **Password** of user `cursoredes` is `cursoredes`.

Contents

Environment Preparation
Link Local Addresses
Unique Local Addresses
Static Routing
Persistent Configuration
Autoconfiguration. Prefix Announcement
ICMPv6

Environment Preparation

We will configure the network topology shown in the following figure:

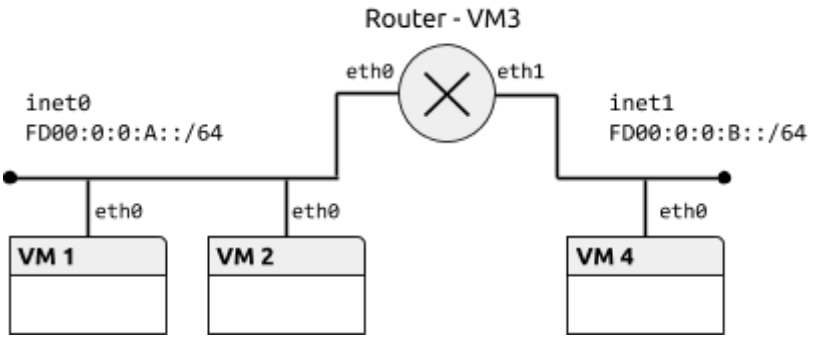

The topology configuration file would have the following content:

```
netprefix inet
machine 1 0 0
machine 2 0 0
machine 3 0 0 1 1
machine 4 0 1
```

Link Local Addresses

A link-local address is valid only for communications within the network link that the interface is connected to. Packets with link-local addresses are never routed. The format prefix for these addresses is `fe80::/10`.

Exercise 1 [VM1, VM2]. Enable interface `eth0` in VM1 and VM2 and check the link-local addresses assigned with the `ip addr` command.

```
VM1
$sudo ip link set eth0 up
$ip addr
fe80::a00:27ff:fe77:97a7/64

VM2
$sudo ip link set eth0 up
$ip addr
fe80::a00:27ff:fe71:28a0/64
```

Exercise 2 [VM1, VM2]. Check the connectivity between VM1 and VM2 with the `ping6` command. When link-local addresses are used, it is necessary to specify the source interface, for example, adding `%<interface_name>` to the address. Observe the generated traffic with Wireshark, specially the protocols encapsulated on each datagram and the IPv6 parameters.

```
VM1
$ping6 fe80::a00:27ff:fe71:28a0 -I eth0
```

No.	Time	Source	Destination	Protoc	Lengt	Info
1	0.00000000	fe80::a00:27ff:fe77	ff02::1:ff71:28a0	ICMPv6	86	Neighbor Solicitation for fe80::a00:27ff:fe71:28a0 from 08:00:27:77:97:a7
2	0.00062409	fe80::a00:27ff:fe71	fe80::a00:27ff:fe77	ICMPv6	86	Neighbor Advertisement fe80::a00:27ff:fe71:28a0 (sol, ovr) is at 08:00:27:71:28:a0
3	0.00064017	fe80::a00:27ff:fe77	fe80::a00:27ff:fe71	ICMPv6	118	Echo (ping) request id=0x08fd, seq=1, hop limit=64 (reply in 4)
4	0.00093144	fe80::a00:27ff:fe71	fe80::a00:27ff:fe77	ICMPv6	118	Echo (ping) reply id=0x08fd, seq=1, hop limit=64 (request in 3)
5	1.00187502	fe80::a00:27ff:fe77	fe80::a00:27ff:fe71	ICMPv6	118	Echo (ping) request id=0x08fd, seq=2, hop limit=64 (reply in 6)
6	1.00250648	fe80::a00:27ff:fe71	fe80::a00:27ff:fe77	ICMPv6	118	Echo (ping) reply id=0x08fd, seq=2, hop limit=64 (request in 5)
7	5.00670297	fe80::a00:27ff:fe71	fe80::a00:27ff:fe77	ICMPv6	86	Neighbor Solicitation for fe80::a00:27ff:fe77:97a7 from 08:00:27:71:28:a0
8	5.00675337	fe80::a00:27ff:fe77	fe80::a00:27ff:fe71	ICMPv6	78	Neighbor Advertisement fe80::a00:27ff:fe77:97a7 (sol)

Exercise 3 [Router, VM4]. Enable interface `eth0` in VM1 and the two interfaces in Router. Check the connectivity between Router and VM1, and between Router and VM4 using link-local addresses. Remember to specify the source interface.

```
VM3
$ sudo ip link seth eth0 up
$ sudo ip link set eth1 up

$ping6  fe80::a00:27ff:fe71:28a0 -I eth0

[cursoredes@localhost ~]$ ping6 fe80::a00:27ff:fe71:28a0 -I eth0
PING fe80::a00:27ff:fe71:28a0(fe80::a00:27ff:fe71:28a0) from fe80::a00:27ff:fe53
:350f%eth0 eth0: 56 data bytes
64 bytes from fe80::a00:27ff:fe71:28a0%eth0: icmp_seq=1 ttl=64 time=0.844 ms
64 bytes from fe80::a00:27ff:fe71:28a0%eth0: icmp_seq=2 ttl=64 time=0.571 ms
^C
--- fe80::a00:27ff:fe71:28a0 ping statistics ---
2 packets transmitted, 2 received, 0% packet loss, time 1000ms
rtt min/avg/max/mdev = 0.571/0.707/0.844/0.139 ms
```

```
$ping6  fe80::a00:27ff:fe71:28a0 -I eth1
```

```
[cursoredes@localhost ~]$ ping6 fe80::a00:27ff:fe9e:8ca1 -I eth1
PING fe80::a00:27ff:fe9e:8ca1(fe80::a00:27ff:fe9e:8ca1) from fe80::a00:27ff:fe3e
:4e5d%eth1 eth1: 56 data bytes
64 bytes from fe80::a00:27ff:fe9e:8ca1%eth1: icmp_seq=1 ttl=64 time=0.833 ms
64 bytes from fe80::a00:27ff:fe9e:8ca1%eth1: icmp_seq=2 ttl=64 time=0.548 ms
^C
--- fe80::a00:27ff:fe9e:8ca1 ping statistics ---
2 packets transmitted, 2 received, 0% packet loss, time 1000ms
rtt min/avg/max/mdev = 0.548/0.690/0.833/0.144 ms
```

To know more... IPv4 also reserves the block `169.254.0.0/16` for link-local addresses, when it is not possible to configure interfaces by other means. More details in RFC 3927.

Unique Local Addresses

A Unique Local Address (ULA) is globally unique and is intended for local communications. Packets with ULAs are not globally routable. Instead, they are routed inside of a more limited area, such as a site or between a limited set of sites. The format prefix is `fc00::/7`.

Exercise 4 [VM1, VM2]. Configure VM1 and VM2 to have an ULA address in network `fd00:0:0:a::/64` with command `ip`. The interface ID can be chosen freely, as long as it is not the same in both machines. Include the prefix length when setting the addresses.

```
VM1
$sudo ip a add  fd00:0:0:a::1/64 dev eth0

VM2
$ sudo ip a add  fd00:0:0:a::2/64 dev eth0
```

Exercise 5 [VM1, VM2]. Check the connectivity between VM1 and VM2 with the `ping6` command using the new address. Observe the generated traffic with Wireshark.

```
VM1
$ping6 fd00:0:0:a::2 -I eth0
```

```
[cursoredes@localhost ~]$ ping6 fd00:0:0:a::2 -I eth0
PING fd00:0:0:a::2(fd00:0:0:a::2) from fd00:0:0:a::1 eth0: 56 data bytes
64 bytes from fd00:0:0:a::2: icmp_seq=1 ttl=64 time=0.861 ms
64 bytes from fd00:0:0:a::2: icmp_seq=2 ttl=64 time=0.473 ms
^C
--- fd00:0:0:a::2 ping statistics ---
2 packets transmitted, 2 received, 0% packet loss, time 999ms
rtt min/avg/max/mdev = 0.473/0.667/0.861/0.194 ms
```

Exercise 6 [Router, VM4]. Configure ULA addresses for both interfaces of Router (networks `fd00:0:0:a::/64` and `fd00:0:0:b::/64`) and the interface of VM4 (`fd00:0:0:b::/64`). As in the previous exercise, the interface ID must be different within the same network.

```
VM3
$sudo ip a add  fd00:0:0:a::3/64 dev eth0
$sudo ip a add  fd00:0:0:b::3/64 dev eth1

VM4
$sudo ip a add  fd00:0:0:b::1/64 dev eth0
```

Exercise 7. Check the connectivity between Router and VM1, and between Router and VM4 using ULA addresses. Check also that VM1 can not reach VM4.

```
VM1
$ping6 fd00:0:0:a::3 -I eth0
$ping6  fd00:0:0:b::1 -I eth0
```

Static Routing

According to the topology, Router must route traffic between networks `fd00:0:0:a::/64` and `fd00:0:0:b::/64`. In this section, we are going to configure static routing, based on routes we will manually set in all VMs.

Exercise 8 [VM1, Router]. Consult the routing tables in Router, using the `ip route` command. Consult the `man` page of the command to select IPv6 routes.

```
VM3
$ip -6 route
```

Exercise 9 [Router]. In order to Router to effectively act as a router, we have to enable IPv6 traffic forwarding. This can be temporarily done with command `sysctl -w net.ipv6.conf.all.forwarding=1.`

```
VM3
$sudo sysctl -w net.ipv6.conf.all.forwarding=1
```

Exercise 10 [VM1, VM2, VM4]. Finally, we have to configure the routing table in the VMs. Add the address of Router as the default route with `ip route`. Check the connectivity between VM1 and VM4 using the `ping6` command.

```
VM1
$sudo ip route add default via fd00:0:0:a::3

VM2
$sudo ip route add default via fd00:0:0:a::3

VM3
$sudo ip route add default via fd00:0:0:b::3
```

Exercise 11. Open Wireshark in Router and start two packet captures, onel on each interface. Flush the neighbor table in VM1 and Router (with `ip neigh flush dev <device>`). Use the `ping6` command between VM1 and VM4. Complete the following tables with all messages until the first Echo Reply:

Network `fd00:0:0:a::/64` - Router (eth0)

Src MAC addr	Dst MAC addr	Src IPv6 addr	Dst IPv6 addr	ICMPv6 type
08:00:27:77:97:a7	33:33:ff:00:00:03	fd00:0:0:a::1	ff02:1:ff00:3	Neighbour Solicitation
33:33:ff:00:00:03	08:00:27:77:97:a7	fd00:0:0:a::3	fd00:0:0:a::1	Neighbour Advertisement
08:00:27:77:97:a7	08:00:27:53:35:0f	fd00:0:0:a::1	fd00:0:0:b::1	Echo request
08:00:27:53:35:0f	08:00:27:77:97:a7	fd00:0:0:b::1	fd00:0:0:a::1	Echo reply

Network `fd00:0:0:b::/64` - Router (eth1)

Src MAC addr	Dst MAC addr	Src IPv6 addr	Dst IPv6 addr	ICMPv6 type
08:00:27:3e:4e:5d	33:33:ff:00:00:01	fe80:a00:27ff:fe3e:4e5d	ff02:1:ff00:1	Neighbour Solicitation
08:00:27:9e:8c:a1	08:00:27:3e:4e:5d	fd00:0:0:b::1	fe80:a00:27ff:fe3e:4e5d	Neighbour Advertisement
08:00:27:53:35:0f	08:00:27:77:97:a7	fd00:0:0:b::1	fd00:0:0:a::1	Echo request
08:00:27:77:97:a7	08:00:27:53:35:0f	fd00:0:0:a::1	fd00:0:0:b::1	Echo reply

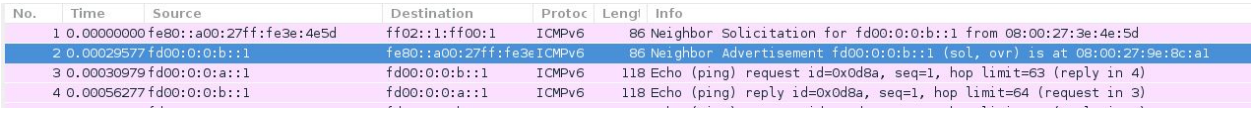

No.	Time	Source	Destination	Protoc	Lengt	Info
1	0.00000000	fe80::a00:27ff:fe3e:4e5d	ff02::1:ff00:1	ICMPv6	86	Neighbor Solicitation for fd00:0:0:b::1 from 08:00:27:3e:4e:5d
2	0.00029577	fd00:0:0:b::1	fe80::a00:27ff:fe3e	ICMPv6	86	Neighbor Advertisement fd00:0:0:b::1 (sol, ovr) is at 08:00:27:9e:8c:a1
3	0.00030979	fd00:0:0:a::1	fd00:0:0:b::1	ICMPv6	118	Echo (ping) request id=0x0d8a, seq=1, hop limit=63 (reply in 4)
4	0.00056277	fd00:0:0:b::1	fd00:0:0:a::1	ICMPv6	118	Echo (ping) reply id=0x0d8a, seq=1, hop limit=64 (request in 3)

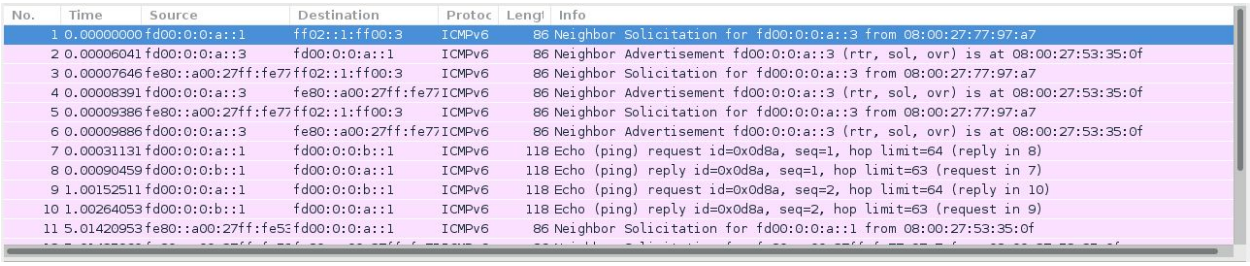

No.	Time	Source	Destination	Protoc	Lengt	Info
1	0.00000000	fd00:0:0:a::1	ff02::1:ff00:3	ICMPv6	86	Neighbor Solicitation for fd00:0:0:a::3 from 08:00:27:77:97:a7
2	0.00006041	fd00:0:0:a::3	fd00:0:0:a::1	ICMPv6	86	Neighbor Advertisement fd00:0:0:a::3 (rtr, sol, ovr) is at 08:00:27:53:35:0f
3	0.00007646	fe80::a00:27ff:fe77	ff02::1:ff00:3	ICMPv6	86	Neighbor Solicitation for fd00:0:0:a::3 from 08:00:27:77:97:a7
4	0.00008391	fd00:0:0:a::3	fe80::a00:27ff:fe77	ICMPv6	86	Neighbor Advertisement fd00:0:0:a::3 (rtr, sol, ovr) is at 08:00:27:53:35:0f
5	0.00009386	fe80::a00:27ff:fe77	ff02::1:ff00:3	ICMPv6	86	Neighbor Solicitation for fd00:0:0:a::3 from 08:00:27:77:97:a7
6	0.00009886	fd00:0:0:a::3	fe80::a00:27ff:fe77	ICMPv6	86	Neighbor Advertisement fd00:0:0:a::3 (rtr, sol, ovr) is at 08:00:27:53:35:0f
7	0.00031131	fd00:0:0:a::1	fd00:0:0:b::1	ICMPv6	118	Echo (ping) request id=0x0d8a, seq=1, hop limit=64 (reply in 8)
8	0.00090459	fd00:0:0:b::1	fd00:0:0:a::1	ICMPv6	118	Echo (ping) reply id=0x0d8a, seq=1, hop limit=63 (request in 7)
9	1.00152511	fd00:0:0:a::1	fd00:0:0:b::1	ICMPv6	118	Echo (ping) request id=0x0d8a, seq=2, hop limit=64 (reply in 10)
10	1.00264053	fd00:0:0:b::1	fd00:0:0:a::1	ICMPv6	118	Echo (ping) reply id=0x0d8a, seq=2, hop limit=63 (request in 9)
11	5.01420953	fe80::a00:27ff:fe53	fd00:0:0:a::1	ICMPv6	86	Neighbor Solicitation for fd00:0:0:a::1 from 08:00:27:53:35:0f

Persistent Configuration

The configuration done in previous sections are volatile and will disappear when the server are restarted. During system boot, it is possible to automatically configure some interfaces according to the information stored on the server's disk.

Exercise 12 [Router]. Create two files, `ifcfg-eth0` and `ifcfg-eth1`, in directory `/etc/sysconfig/network-scripts/` with the static configuration of each interface. Use the following options (described in `/usr/share/doc/initscripts-*/sysconfig.txt`):

```
TYPE=Ethernet
BOOTPROTO=none
IPV6ADDR=<static IP address in CIDR format>
IPV6_DEFAULTGW=<static IP address of default router>
DEVICE=<interface name>
```

VM3
$sudo nano /etc/sysconfig/network-scripts/ifcfg-eth0
$sudo nano /etc/sysconfig/network-scripts/ifcfg-eth1

Exercise 13 [Router]. Check the persistent configuration with commands `ifup` and `ifdown`.

VM3
$sudo ifup eth0
$sudo ifdown eth0

```
[cursoredes@localhost ~]$ sudo ifdown eth0
[cursoredes@localhost ~]$ sudo ifup eth0
ERROR     : [/etc/sysconfig/network-scripts/ifup-ipv6] Global IPv6 forwarding is disabled
in configuration, but not currently disabled in kernel
ERROR     : [/etc/sysconfig/network-scripts/ifup-ipv6] Please restart network with '/sbin/
service network restart'
ERROR     : [ipv6_set_default_route] Given IPv6 default gateway 'fe80::a00:27ff:fe53:350f'
 is link-local, but no scope or gateway device is specified
INFO      : [ipv6_wait_tentative] Waiting for interface eth0 IPv6 address(es) to leave the
 'tentative' state
INFO      : [ipv6_wait_tentative] Waiting for interface eth0 IPv6 address(es) to leave the
 'tentative' state
[cursoredes@localhost ~]$
```

Autoconfiguration. Prefix Announcement

The neighbour discovery protocol is also used for the autoconfiguration of network interfaces. When an interface is enabled, a message for router discovery is sent. Then, the available routers answer with an advertisement containing, among others, the network prefix.

Exercise 14 [VM1, VM2, VM4]. Remove ULAs from interfaces by disabling them with `ip link`.

```
VM1
$sudo ip address del fd00:0:0:a::1/64 dev eth0
$sudo ip link

VM2
$sudo ip address del fd00:0:0:a::2/64 dev eth0
$sudo ip link

VM4
$sudo ip address del fd00:0:0:b::1/64 dev eth0
$sudo ip link
```

Exercise 15 [Router]. Configure `zebra` to make Router announce network prefixes. To do that, create file `/etc/quagga/zebra.conf` and include prefix information for both networks as in the following listing:

```
interface eth0
  no ipv6 nd suppress-ra
  ipv6 nd prefix fd00:0:0:a::/64
```

Finally, start the service with command `service zebra start`.

Note: In `/usr/share/doc/quagga-0.99.22.4` there are sample configuration files.

```
VM3
$sudo nano /etc/quagga/zebra.conf
$sudo service zebra start
```

```
  GNU nano 2.3.1            File: /etc/quagga/zebra.conf

interface eth0
  no ipv6 nd suppress-ra
  ipv6 nd prefix fd00:0:0:a::/64

interface eth1
  no ipv6 nd suppress-ra
  ipv6 nd prefix fd00:0:0:b::/64
```

Exercise 16 [VM4]. Check the autoconfiguration of the network interface of VM4, by enabling it again and consulting the assigned address.

```
VM4
$ip link set eth0 up
$ip a
```

```
[cursoredes@localhost ~]$ ip a
1: lo: <LOOPBACK,UP,LOWER_UP> mtu 65536 qdisc noqueue state UNKNOWN group defaul
t qlen 1000
    link/loopback 00:00:00:00:00:00 brd 00:00:00:00:00:00
    inet 127.0.0.1/8 scope host lo
       valid_lft forever preferred_lft forever
    inet6 ::1/128 scope host
       valid_lft forever preferred_lft forever
2: eth0: <BROADCAST,MULTICAST,UP,LOWER_UP> mtu 1500 qdisc pfifo_fast state UP gr
oup default qlen 1000
    link/ether 08:00:27:9e:8c:a1 brd ff:ff:ff:ff:ff:ff
    inet6 fd00::b:a00:27ff:fe9e:8ca1/64 scope global mngtmpaddr dynamic
       valid_lft 2591997sec preferred_lft 604797sec
    inet6 fe80::a00:27ff:fe9e:8ca1/64 scope link
       valid_lft forever preferred_lft forever
[cursoredes@localhost ~]$
```

Exercise 17 [VM1 and VM2]. Analyze messages corresponding to the neighbour discovery protocol:

- Enable the interface in VM2, check that it is correctly configured and start a packet capture with Wireshark.
- Enable the interface in VM1 and analyze ICMP messages of type "Router solicitation" and "Router advertisement".
- Check source and destination addresses of datagrams, as well as source and destination addresses of the Ethernet frame. Especially the relation between the multicast group ID with IP and MAC addresses. Analyze the output of command `ip maddr`.

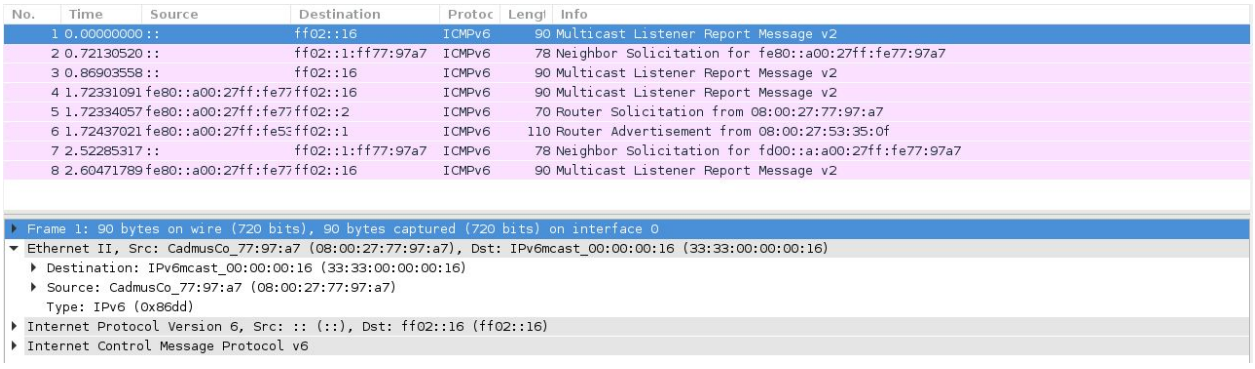

No.	Time	Source	Destination	Protoc	Lengt	Info
1	0.00000000	::	ff02::16	ICMPv6	90	Multicast Listener Report Message v2
2	0.72130520	::	ff02::1:ff77:97a7	ICMPv6	78	Neighbor Solicitation for fe80::a00:27ff:fe77:97a7
3	0.86903558	::	ff02::16	ICMPv6	90	Multicast Listener Report Message v2
4	1.72331091	fe80::a00:27ff:fe77	ff02::16	ICMPv6	90	Multicast Listener Report Message v2
5	1.72334057	fe80::a00:27ff:fe77	ff02::2	ICMPv6	70	Router Solicitation from 08:00:27:77:97:a7
6	1.72437021	fe80::a00:27ff:fe53	ff02::1	ICMPv6	110	Router Advertisement from 08:00:27:53:35:0f
7	2.52285317	::	ff02::1:ff77:97a7	ICMPv6	78	Neighbor Solicitation for fd00::a:a00:27ff:fe77:97a7
8	2.60471789	fe80::a00:27ff:fe77	ff02::16	ICMPv6	90	Multicast Listener Report Message v2

```
▸ Frame 1: 90 bytes on wire (720 bits), 90 bytes captured (720 bits) on interface 0
▾ Ethernet II, Src: CadmusCo_77:97:a7 (08:00:27:77:97:a7), Dst: IPv6mcast_00:00:00:16 (33:33:00:00:00:16)
  ▸ Destination: IPv6mcast_00:00:00:16 (33:33:00:00:00:16)
  ▸ Source: CadmusCo_77:97:a7 (08:00:27:77:97:a7)
    Type: IPv6 (0x86dd)
▸ Internet Protocol Version 6, Src: :: (::), Dst: ff02::16 (ff02::16)
▸ Internet Control Message Protocol v6
```

To know more… In the autoconfiguration process, the interface ID is also generated following the *Extended Unique Identifier* (EUI-64) described in RFC 4193. The configuration of router advertisement protocol has many options that can be consulted in the `zebra` documentation (e.g. interval between unsolicited advertisements). If only prefix announcement is needed, without any routing functionality, the open source project *Router Advertisement Daemon*, `radvd`, can also be used.

***Exercise 18* [VM1].** The interface ID generation through EUI-64 poses a privacy problem for client machines, as they can be tracked by their MAC addresses. In this case, it is convenient to activate the privacy extensions, to generate a pseudorandom temporary interface ID for global addresses. Activate the privacy extensions in VM1 with command `sysctl -w net.ipv6.conf.eth0.use_tempaddr=2`.

```
VM1
$sudo ip a del fd00::a:a00:27ff:fe77:97a7/64 dev eth0
$sudo ip link set eth0 down
$sudo sysctl -w net.ipv6.conf.eth0.use_tempaddr=2
$sudo ip link set eth0 up
$ip a
```

```
[cursoredes@localhost ~]$ ip a
1: lo: <LOOPBACK,UP,LOWER_UP> mtu 65536 qdisc noqueue state UNKNOWN group defaul
t qlen 1000
    link/loopback 00:00:00:00:00:00 brd 00:00:00:00:00:00
    inet 127.0.0.1/8 scope host lo
       valid_lft forever preferred_lft forever
    inet6 ::1/128 scope host
       valid_lft forever preferred_lft forever
2: eth0: <BROADCAST,MULTICAST,UP,LOWER_UP> mtu 1500 qdisc pfifo_fast state UP gr
oup default qlen 1000
    link/ether 08:00:27:77:97:a7 brd ff:ff:ff:ff:ff:ff
    inet6 fd00::a:2544:6546:5f4b:f87/64 scope global temporary tentative dynamic

       valid_lft 604800sec preferred_lft 85800sec
    inet6 fd00::a:a00:27ff:fe77:97a7/64 scope global tentative mngtmpaddr dynami
c
       valid_lft 2592000sec preferred_lft 604800sec
    inet6 fe80::a00:27ff:fe77:97a7/64 scope link
       valid_lft forever preferred_lft forever
[cursoredes@localhost ~]$
```

ICMPv6

ICMPv6 provides messages for network control, both to detect errors and to get information from the network. In this lab we have already seen the most important ones.

Exercise 19. Generate messages of the following types in the network and analyze them with Wireshark:

- Echo request and reply.
- Router solicitation and advertisement
- Neighbour solicitation and advertisement
- Destination unreachable - No route to destination (Code: 0)

Copy screenshots of Wireshark for the last two messages.

No.	Time	Source	Destination	Protoc	Lengt	Info
1	0.00000000	fe80::a00:27ff:fe3e:4e5d	ff02::1:ff00:1	ICMPv6	86	Neighbor Solicitation for fd00:0:0:b::1 from 08:00:27:3e:4e:5d
2	0.00029577	fd00:0:0:b::1	fe80::a00:27ff:fe3e	ICMPv6	86	Neighbor Advertisement fd00:0:0:b::1 (sol, ovr) is at 08:00:27:9e:8c:a1
3	0.00030979	fd00:0:0:a::1	fd00:0:0:b::1	ICMPv6	118	Echo (ping) request id=0x0d8a, seq=1, hop limit=63 (reply in 4)
4	0.00056277	fd00:0:0:b::1	fd00:0:0:a::1	ICMPv6	118	Echo (ping) reply id=0x0d8a, seq=1, hop limit=64 (request in 3)

No.	Time	Source	Destination	Protoc	Lengt	Info
1	0.00000000	fd00:0:0:a::1	ff02::1:ff00:3	ICMPv6	86	Neighbor Solicitation for fd00:0:0:a::3 from 08:00:27:77:97:a7
2	0.00006041	fd00:0:0:a::3	fd00:0:0:a::1	ICMPv6	86	Neighbor Advertisement fd00:0:0:a::3 (rtr, sol, ovr) is at 08:00:27:53:35:0f
3	0.00007646	fe80::a00:27ff:fe77	ff02::1:ff00:3	ICMPv6	86	Neighbor Solicitation for fd00:0:0:a::3 from 08:00:27:77:97:a7
4	0.00008391	fd00:0:0:a::3	fe80::a00:27ff:fe77	ICMPv6	86	Neighbor Advertisement fd00:0:0:a::3 (rtr, sol, ovr) is at 08:00:27:53:35:0f
5	0.00009386	fe80::a00:27ff:fe77	ff02::1:ff00:3	ICMPv6	86	Neighbor Solicitation for fd00:0:0:a::3 from 08:00:27:77:97:a7
6	0.00009886	fd00:0:0:a::3	fe80::a00:27ff:fe77	ICMPv6	86	Neighbor Advertisement fd00:0:0:a::3 (rtr, sol, ovr) is at 08:00:27:53:35:0f
7	0.00031131	fd00:0:0:a::1	fd00:0:0:b::1	ICMPv6	118	Echo (ping) request id=0x0d8a, seq=1, hop limit=64 (reply in 8)
8	0.00090459	fd00:0:0:b::1	fd00:0:0:a::1	ICMPv6	118	Echo (ping) reply id=0x0d8a, seq=1, hop limit=63 (request in 7)
9	1.00152511	fd00:0:0:a::1	fd00:0:0:b::1	ICMPv6	118	Echo (ping) request id=0x0d8a, seq=2, hop limit=64 (reply in 10)
10	1.00264053	fd00:0:0:b::1	fd00:0:0:a::1	ICMPv6	118	Echo (ping) reply id=0x0d8a, seq=2, hop limit=63 (request in 9)
11	5.01420953	fe80::a00:27ff:fe53	fd00:0:0:a::1	ICMPv6	86	Neighbor Solicitation for fd00:0:0:a::1 from 08:00:27:53:35:0f

No.	Time	Source	Destination	Protoc	Lengt	Info
1	0.00000000	fe80::a00:27ff:fe3e	ff02::1	ICMPv6	110	Router Advertisement from 08:00:27:3e:4e:5d
2	9.59097331	fd00::b:a00:27ff:fe	ff02::1:ff00:5	ICMPv6	86	Neighbor Solicitation for fd00:0:0:b::5 from 08:00:27:9e:8c:a1
3	10.5926154	fd00::b:a00:27ff:fe	ff02::1:ff00:5	ICMPv6	86	Neighbor Solicitation for fd00:0:0:b::5 from 08:00:27:9e:8c:a1
4	11.5946126	fd00::b:a00:27ff:fe	ff02::1:ff00:5	ICMPv6	86	Neighbor Solicitation for fd00:0:0:b::5 from 08:00:27:9e:8c:a1
5	13.5933367	fd00::b:a00:27ff:fe	ff02::1:ff00:5	ICMPv6	86	Neighbor Solicitation for fd00:0:0:b::5 from 08:00:27:9e:8c:a1
6	14.5952359	fd00::b:a00:27ff:fe	ff02::1:ff00:5	ICMPv6	86	Neighbor Solicitation for fd00:0:0:b::5 from 08:00:27:9e:8c:a1
7	15.5964976	fd00::b:a00:27ff:fe	ff02::1:ff00:5	ICMPv6	86	Neighbor Solicitation for fd00:0:0:b::5 from 08:00:27:9e:8c:a1
8	17.5933099	fd00::b:a00:27ff:fe	ff02::1:ff00:5	ICMPv6	86	Neighbor Solicitation for fd00:0:0:b::5 from 08:00:27:9e:8c:a1
9	18.5954325	fd00::b:a00:27ff:fe	ff02::1:ff00:5	ICMPv6	86	Neighbor Solicitation for fd00:0:0:b::5 from 08:00:27:9e:8c:a1
10	19.5968537	fd00::b:a00:27ff:fe	ff02::1:ff00:5	ICMPv6	86	Neighbor Solicitation for fd00:0:0:b::5 from 08:00:27:9e:8c:a1